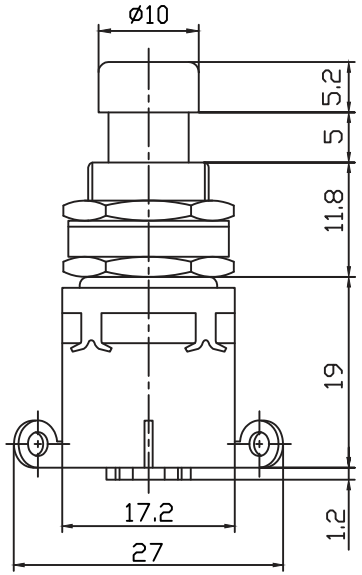

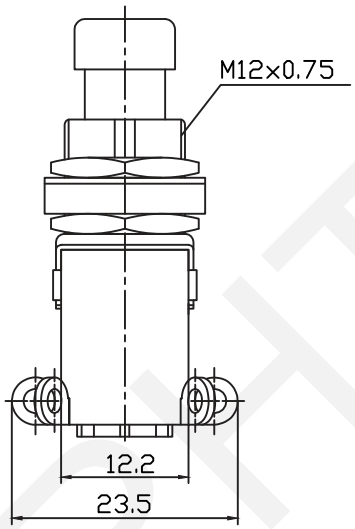

Circuitry

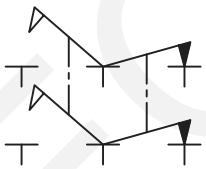

ON-(OFF)

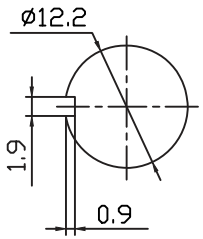

Mounting

ELECTRICAL

Rating: 4A 125V AC ,2A 250V AC

Contact Resistance: 20mΩ Max

Insulation Resistance: 100MΩ/500VDC Min

Withstanding Voltage: AC1000V/1Min

Operating Temperature: -25°C~+85°C

Electrical Life: 50000 Cycles

ORDER INFORMATION

Product NO.: RHTGYBS-017 X 1 X

Push Button Switch Series

Function:B=ON-OFF

C=ON-(OFF) D=OFF-(ON)

1=Single pole 2=Double pole

Sleeve length L=14.2; 11.8; 9.8

RHTECP NINGBO RHT ELECTRONIC CO.,LTD	UNITS:mm	SHEET SIZE: A4	SCALE:---	DRWN BY PAN	Push Button Switch Series	
	0~3	3~18	18~50	50~120	CHK'D BY FENG	THIRD ANGLE PROJECTION
	±0.12	±0.15	±0.3	±0.5	APPR BY ZHAN	RHTGYBS-017