UL/CUL Technical Data

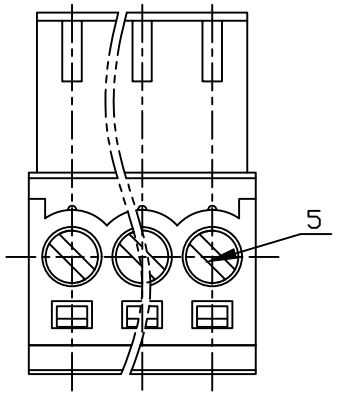

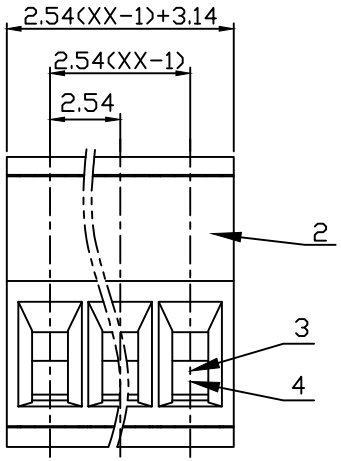

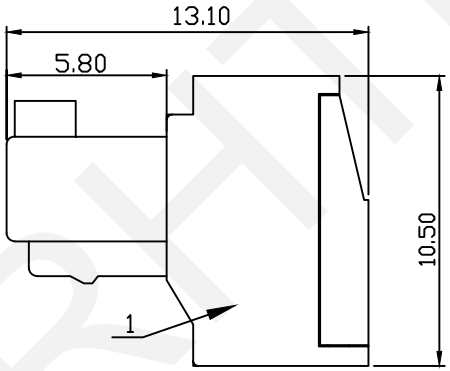

Use Group	B	C	D
Rated Voltage [V]	150	-	-
Rated Current [A]	5	-	-
Wire Range Solid/Stranded[AWG]	26-20		
Withstanding Voltage	1300V/1Min		
IEC Technical Data	IEC61984		
Overvoltage Category	III	III	II
Contamination Class	3	2	2
Rated Voltage [V]	100	160	320
Rated Current [A]	5	5	5
Impulse Withstand Voltage [KV]	1.5	2.5	2.5
Conductor Cross Section Solid/Flexible [mm²]	0.2-0.5		
Other Data			
Pitch/Poles [mm]/[P]	2.54/02~24		
Stripping Length [mm]	5~6		
Screw/Torque(Max) [N.m]	M1.6/0.1		
Operating Temperature [°C]	-40~105		
RoHS Compliant			

ITEM	NAME OF PART	MATERIAL	NOTES
1	Housing	PA66	UL94V-0
2	Cover	PA66	UL94V-0
3	Clamp	Copper Alloy	Sn Plated
4	Cage	Copper Alloy	M1.6/Ni Plated
5	Screw	Steel	M1.6/Zn Plated

RHTECP

RHTECP NINGBO RHT ELECTRONIC CO.,LTD

UNITS:mm	SHEET SIZE: A4		SCALE:---
0~3	3~18	18~50	50~120
±0.12	±0.15	±0.3	±0.5

DRWN BY PAN
CHK'D BY FENG
APPR BY ZHAN

TERMINAL BLOCK 2.54MM MALE
PLUGGABLE TERMINAL BLOCK ROHS

THIRD ANGLE PROJECTION

RHTBYDK-2.54