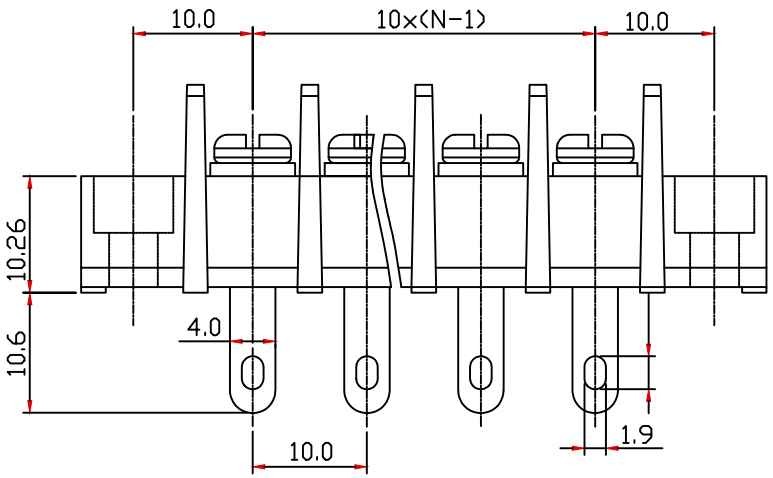

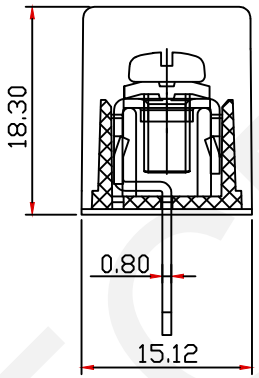

SECTION A-A

Material

Screw:M4.0,Steel, Ni Plated

Pin header:Brass,0.8t, Tin Plated

Housing:PA66.UL94V-0,Black

Electrical

Rated valtage: 300V

Rated current:20A

Wire range:22~12AWG 4.0mm²

Contact Resistance: 20 mΩ

Insulation resistance:500MΩ/DC500V

Withstand voltage:AC2000V/1min

Mechanical

Temp. Range:-40℃~+105℃

Torque:1.2Nm(10.6Lb.in)

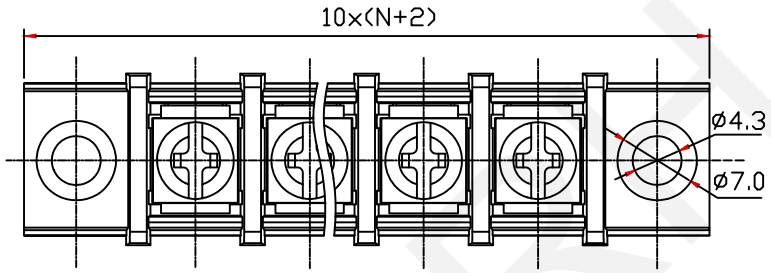

Order Information

RHTBYE5 C-10.0-XXP-A

- Barrier Terminal Block without Cover
- Pin Type:
- Pitch: 10.0mm
- No.of Pole
- A:with Ears

NINGBO RHT ELECTRONIC CO.,LTD	UNITS:mm	SHEET SIZE: A4	SCALE:---	DRWN BY PAN	Barrier TERM BLOCK 10.0MM
	0~3	3~18	18~50	50~120	CHK'D BY FENG
	±0.12	±0.15	±0.3	±0.5	APPR BY ZHAN
	THIRD ANGLE PROJECTION				RHTBYE5C-10.0-XXP-A