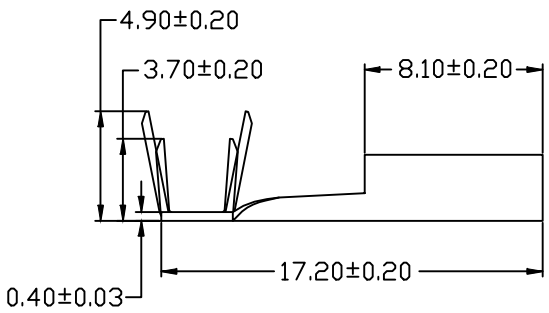

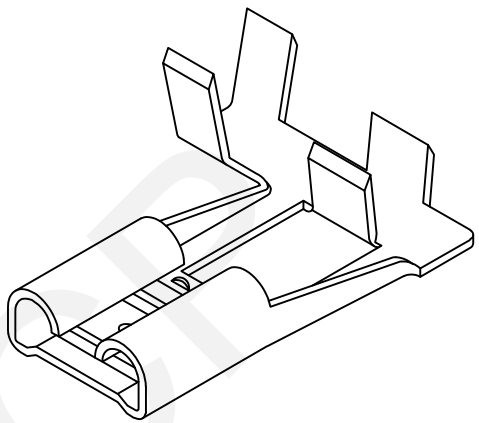

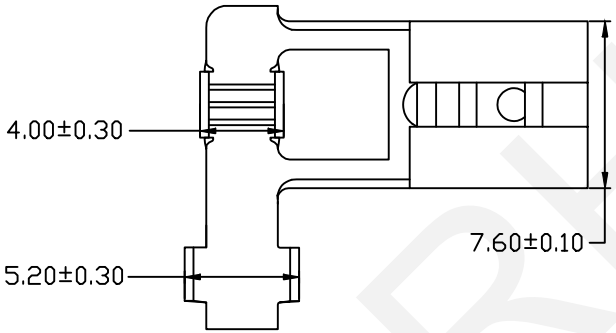

Note:

1. Appearance:Terminal cannot be corrected,scratched or oxidized
2. Material:Brass C2680,T=0.40mm, Tin plating
3. Q'TY:2500PCS/REEL
4.Connectoin Table: W6.35xT0.80mm
5.Wire Range:16~18AWG

RHTECP

RHTECP NINGBO RHT ELECTRONIC CO.,LTD	UNITS:mm	SHEET SIZE: A4	SCALE:---	DRWN BY PAN	250 Type FLAG Female TERM
	0~3	3~18	18~50	50~120	CHK'D BY FENG
	±0.12	±0.15	±0.3	±0.5	APPR BY ZHAN
	THIRD ANGLE PROJECTION				RHTHY4FR04-2500800