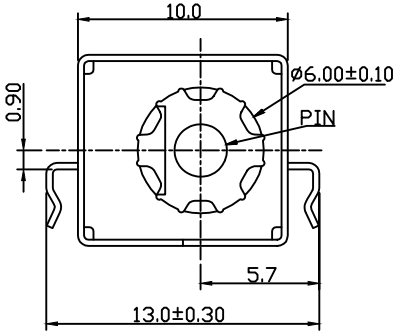

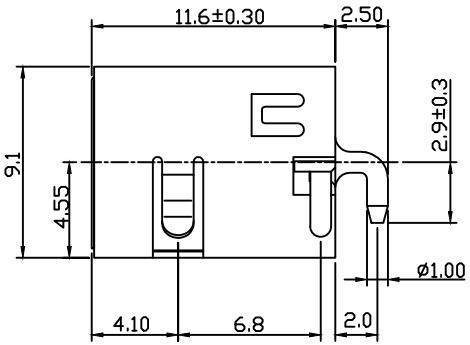

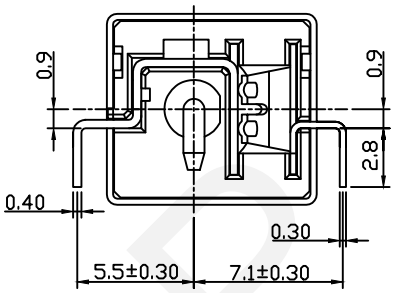

SPECIFICATION

Rated Load:DC 24V4A

Contact resistance:30mΩ, max

Insulation resistance:100MΩ, min

Withstand Voltage:AC500V

Actuating Force:3-20N

Life:5000 cycles

Operating Temperature:-30℃-70℃

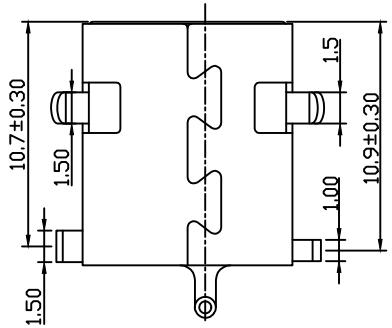

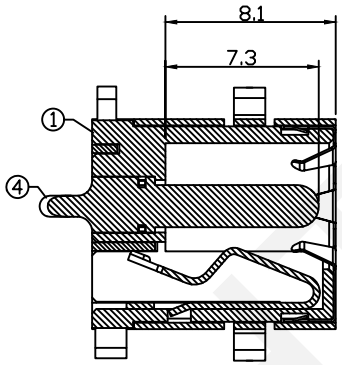

PCB Layout Top view

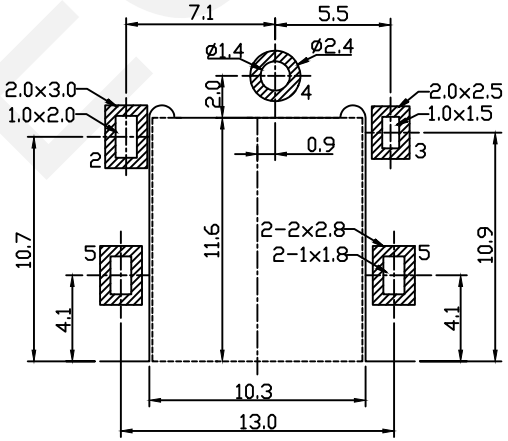

SCHEMATIC

PIN	ø2.0	ø2.5	ø1.65
APPD			

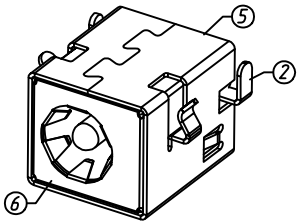

SPECIFICATION

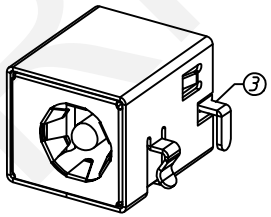

NO.	Description	QTY	Material	Plating
1	Housing	1	PA9T	---
2	Spring Piece	1	Bronze	Ag-plating
3	Contact Foot	1	Brass	Ag-plating
4	PIN	1	Zinc Alloy	Ni-Plating
5	Coat	1	Iron	Ni-plating
6	Spring Piece	1	SUS301	---

RHTECP NINGBO RHT ELECTRONIC CO.,LTD

UNITS:mm	SHEET SIZE: A4	SCALE:---	DRWN BY PAN
0~3	3~18	18~50	50~120
±0.12	±0.15	±0.3	±0.5

CHK'D BY FENG

APPR BY ZHAN

THIRD ANGLE PROJECTION

20V 5.5A DC Jack Mid Mount 1.65mm

RHTAY13DC-030